BAKER®
WATER SYSTEMS DIVISION

Campbell® Monitor® MONOFLEX®

NEW

CURB VALVES

NSF 61 CERTIFIED

Monitor®

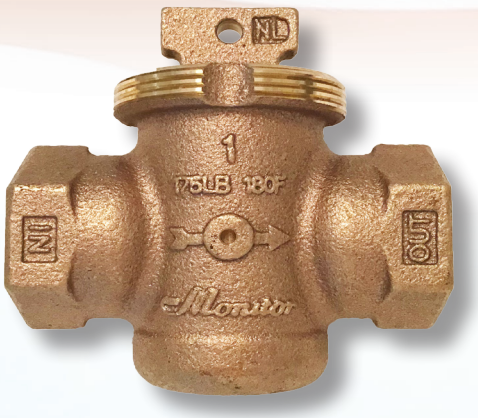

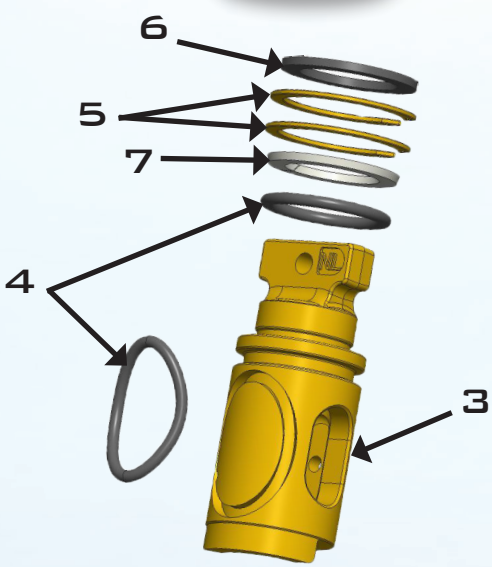

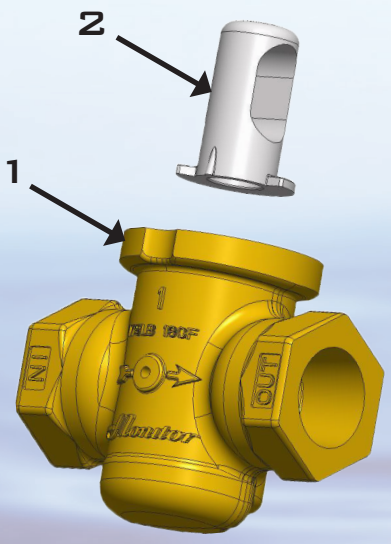

- SIZES ¾", 1", 1¼", 1½", AND 2"
- F.I.P. THREADED CONNECTIONS
- CONSTRUCTED OF LEAD FREE RED BRASS C89844
- 100% PRESSURE TESTED TO 175 PSIG IN BOTH OPEN/CLOSED POSITIONS
- DRAIN OPTION AVAILABLE
- MINNEAPOLIS STYLE THREADED TOP
- HEAVY DUTY CONSTRUCTION TO RESIST GROUND AND PIPE STRESS
- PRECISELY MACHINED SURFACES WITH A CHAMFERED EDGE PROVIDE A POSITIVE SEAL WHICH ALLOWS THE VALVE TO OPEN/CLOSE WITH MINIMAL FORCE
- THE ONE PIECE CLOSED BODY KEEPS CONTAMINATION FROM DIRT AND GROUND WATER TO A MINIMUM AND DIMINISHES POSSIBLE LEAKAGE POINTS

ITEM NO.	PART NO.	DESCRIPTION	QTY
1	1CVDLFM	1" CURB VALVE BODY, CASTED & MACHINED, WITH DRAIN	1
2	1CVINSERT	1" CURB VALVE INSERT	1
3	1CVLFKEY	1" CURB VALVE KEY, MACHINED	1
4	1CVORING	1" CURB VALVE O-RING	2
5	1CVRR	1" CURB VALVE RETAINING RING	2
6	1CVTS	1" CURB VALVE TOP SEAL	1
7	1CVTW	1" CURB VALVE THRUST WASHER	1

REPAIR PARTS ARE FOR INFORMATIONAL PURPOSE ONLY AND ARE NOT OFFERED TO PURCHASE